PUMPSENSE

Fluid Engineering Pvt. Ltd

SW Non-clog Sewage Pumps-range

- High Energy Efficiency
- Optimum Mechanical Reliability
- Large Solid handling capacity
- Large Number of Pumps for optium selection
- Horizontal, Vertical & Cardan Shaft option

Pumpsense SW Range of Sewage Pumps

Pumpsense SW range of pumps have been designed to handle unscreened raw sewage. The range incorporates our knowledge and experience of successful pumping of liquids containing solids and waste material throughout the world. The pumps handle flow rates upto 4000 m3/hr and heads upto 100 m. For duties beyond this range, we can offer customized pumps to meet your specific pumping needs.

Design

The pumps are available either as horizontal or vertical dry well units. Vertical pumps are offered with direct motor mounted or cardan shaft options. Impellers are of open shrouded design with supplementary vanes at the back and front to minimize the chances of ragging and to eliminate the ingress of abrasive materials to the stuffing box area. They have been designed with the minimum number of vanes compatible with good hydraulic performance to ensure that the maximum sizes of solids can be handled.

To further reduce the possibility of ragging, eye velocities have been kept deliberately low. The stuffing box can be provided both with packed glands and mechanical seals. The stuffing box is configured to ensure maximum sleeve life, thus reducing the cost of maintenance. The solid volute casing is protected by renewable wear rings at the front and the back of the impeller. To facilitate cleaning, both the casing and suction branch are provided with easily removable hand hole covers. The vertical selection is available with the motor mounted directly on the pump or with it at a higher floor level in which case it is connected through intermediate cardan shafting to the pump. Depending upon the length involved, this shafting may have intermediate bearings of the plummer block style.

Quality Assurance

All pumps manufactured by us are subjected to stringent quality checks at all stages of manufacture and comply with the appropriate international quality assurance and inspection standards. All pumps are subject to full performance test as per ISO 9906 Class 1. Our quality assurance procedure complies with the requirements of all international inspectorates. The following QA documents are supplied, as a standard, with each pump.

Casing, impeller – Physical & Chemical test reports

Shaft – Ultrasonic, Physical and Chemical test reports

Pump casing – Hydrostatic pressure test report

Impeller- Dynamic balancing report

Asssembled pump – performance test report, dimensional compliance report

Specifications –

Casing – Cast iron GG25

Impeller – Cast iron GG25

Shaft – AISI 416

Shaft sleeve – AISI 416

Wear rings – Bronze

Flanges – PN10 or PN16 depending on working pressure.

To contain the high transient bearing loads inherent in sewage pumps, a cylindrical roller bearing is utilized in conjunction with a heavy duty thrust bearing. Suction and delivery flanges are normally machined and drilled to PN10/ PN16 dimensions but, if required, they can be produced to other standards. A wide range of variations to the above material specification can be incorporated to suit special applications.

SEWAGE PUMPS (H/V)

SW SERIES

RANGE CHART AT 4 POLE, 50 HZ SPEED (1480 rpm)

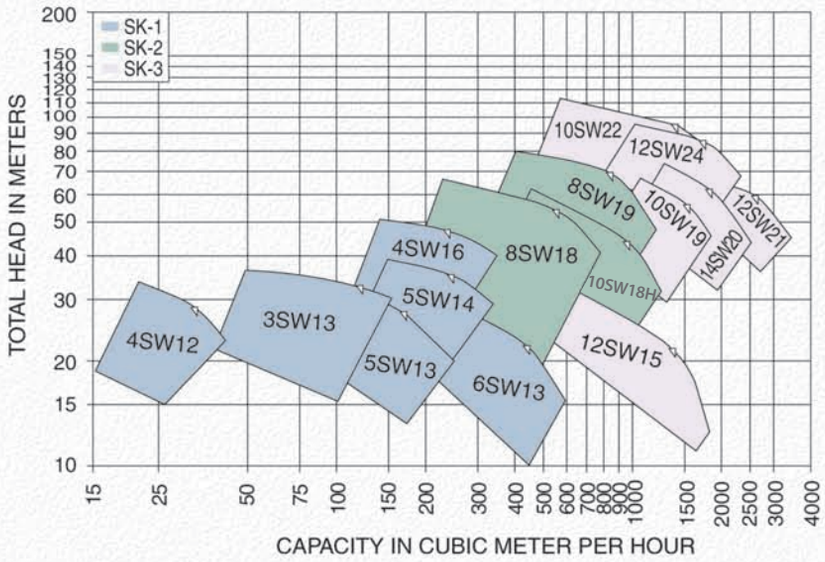

SEWAGE PUMPS (H/V)

SW SERIES

RANGE CHART AT 6 POLE, 50 HZ SPEED (980 rpm)

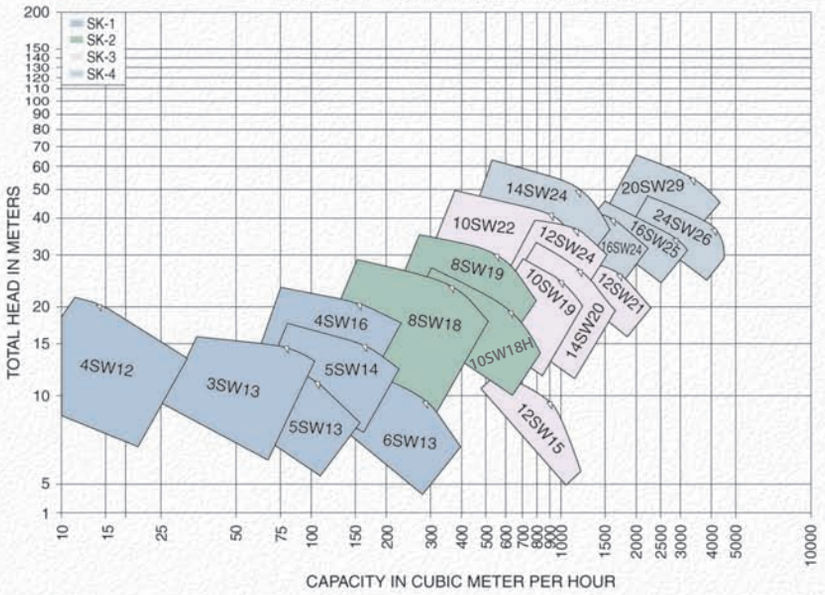

SEWAGE PUMPS (H/V)

SW SERIES

RANGE CHART AT 8 POLE, 50 HZ SPEED (740 rpm)

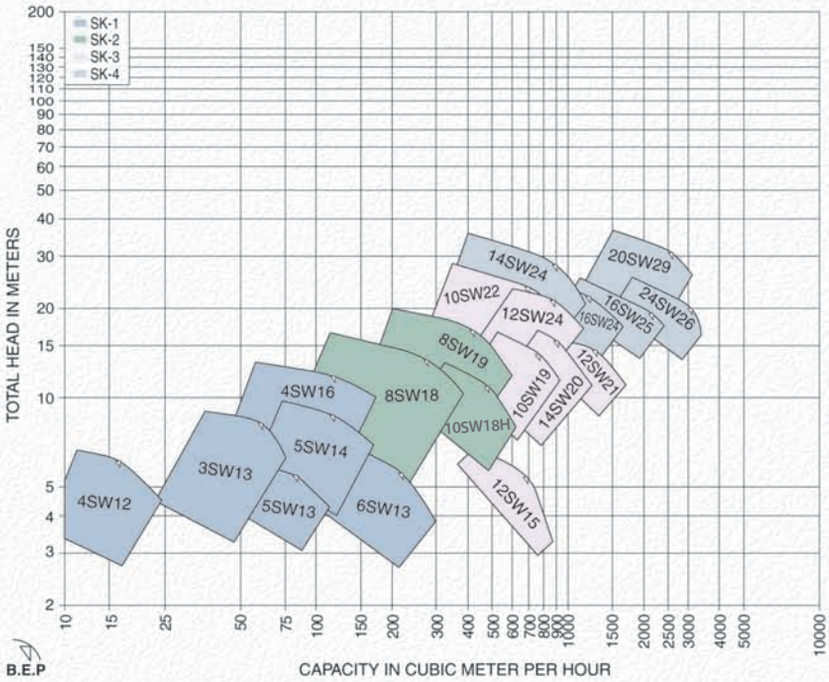

B.E.P

NON-CLOG SEWAGE PUMP HORIZONTAL INSTALLATION

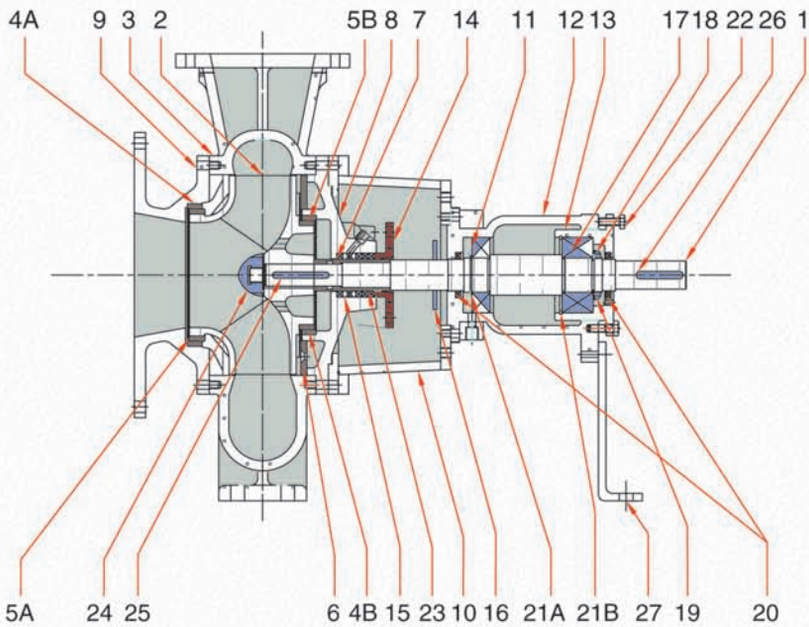

Ref. No.	Description
1	Shaft
2	Impeller
3	Casing
4A	Front Casing Wear Ring
4B	Back Casing Wear Ring
5A	Front Impeller Wear Ring
5B	Back Impeller Wear Ring
6	Back Wear Plate
7	Shaft Sleeve
8	Stuffing Box Cover
9	Suction Cover
10	Bearing Pedestal
11	Inboard Bearing
12	Bearing Housing
13	Bearing Carrier
14	Split Gland
15	Logging Ring
16	Water Thrower
17	Outboard Bearing
18	Lock Nut
19	Lock Washer
20	Oil Seal
21A	Circlip for Inboard Bearing
21B	Circlip Outboard Bearing
22	Adjusting Screw
23	Soft Packing
24	Impeller Nose Cap
25	Impeller Key
26	Coupling Key
27	Support Foot

Ref. No.	Description
1	Shaft
2	Impeller
3	Casing
4a	Front Csaing Wear Ring
4b	Back Casing Wear Ring
5a	Front Impeller Wear Ring
5b	Back Impeller Wear Ring
6	Back Wear Plate
7	Shaft Sleeve
8	Stuffing Box Cover
9	Suction Cover
10	Bearing Pedestal
11	Inboard Bearing
12	Motor Stool
13	Suction Bend
14	Pump Stool
15	Bearing Housing
16	Bearing Carrier
17	Split Gland
18	Logging Ring
19	Water Thrower
20	Outboard Bearing
21	Lock Nut
22	Lock Washer
23	Oil Seal
24A	Circlip for Inboard Bearing
24B	Circlip for Outboard Bearing
25	Adjusting Screw
26	Soft Packing
27	Impeller Nose Cap
28	Impeller Key
29	Coupling Key
30	Suction Bend Hand Hole Cover
31	Casing Hand Hole Cover

NON-CLOG SEWAGE PUMP VERTICAL INSTALLATION

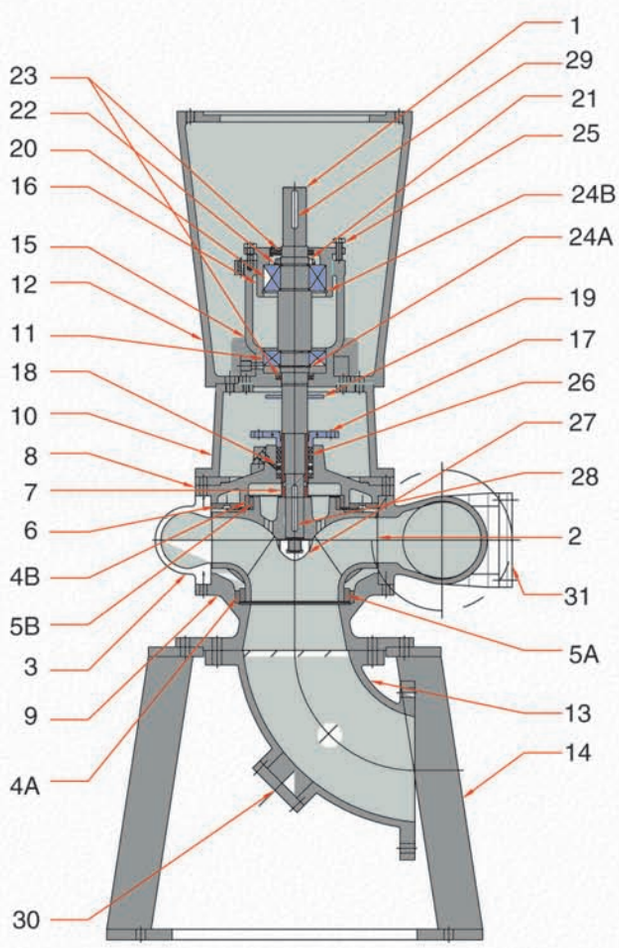

GENERAL ARRANGEMENT DRAWING FOR HORIZONTAL SEWAGE PUMPS

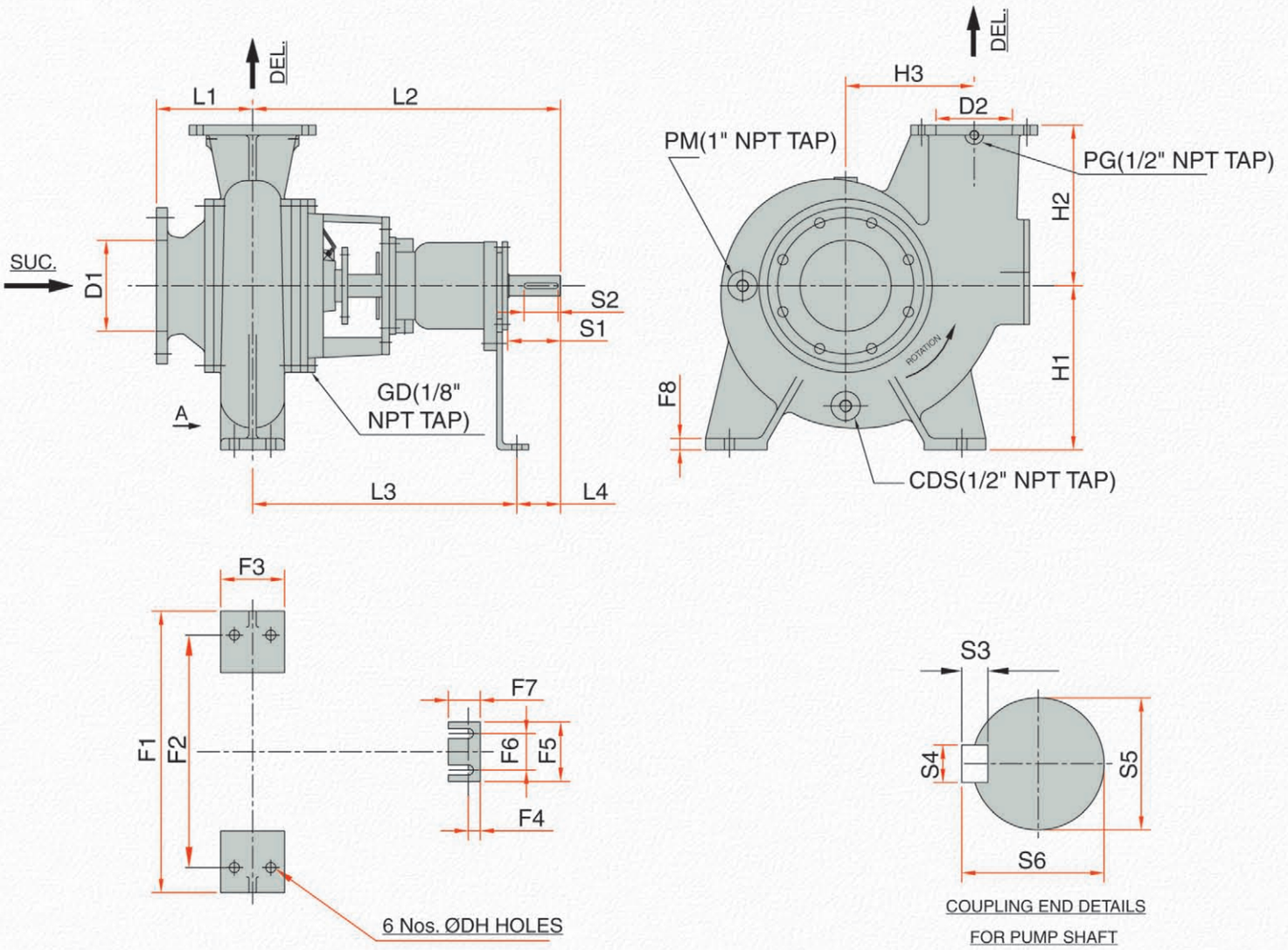

GENERAL DIMENSIONS FOR HORIZONTAL NON-CLOG SEWAGE PUMPS

Sl No	PUMP MODEL	PUMP SIZE	BRANCH SIZE		SHAFT GROUP	OVER ALL DIMENSIONS							BASE DIMENSIONS										SHAFT DETAILS						APPROX. WEIGHTS (kg) of BARE PUMP	DRIVER DETAILS	
			D_1	D_2		L1	L2	L3	L4	H1	H2	H3	F1	F2	F3	F4	F5	F6	F7	F8	N	ØHole	S1	S2	S3	S4	S5	S6		Motor Frame Size	6 Pole 50Hz Selected Motor (kw)
1	3SW13	100X80-320	100	80	SK-1	85	415	302	155	225	200	180	500	410	130	75	140	115	100	22	6	18	80	116	9	14	45	49.5	185	132S	5.5
2	4SW12	100X100-300	100	100	SK-1	100	485	311	165	257	210	195	525	430	130	75	140	115	100	22	6	18	80	116	9	14	45	49.5	200	90L	2.2
3	4SW16	100X100-385	100	100	SK-1	134	519	330	174	275	225	208	525	430	130	75	140	115	100	22	6	18	80	116	9	14	45	49.5	220	160L	18.5
4	5SW13	125X125-330	125	125	SK-1	150	430	340	165	285	250	175	575	485	140	80	150	125	100	24	6	18	80	116	9	14	45	49.5	230	132S	7.5
5	5SW14	125X125-355	125	125	SK-1	175	503	345	160	290	250	175	575	485	140	80	150	125	100	24	6	18	80	116	9	14	45	49.5	245	160M	11
6	6SW13	200X150-340	200	150	SK-1	205	676	636	140	360	353	282	615	510	140	80	150	125	100	24	6	18	80	116	9	14	45	49.5	270	160M	11
7	8SW18	250X200-451	250	200	SK-2	220	715	640	165	412	390	315	700	615	160	95	150	125	130	28	6	22	105	170	11	18	60	65.5	310	200L	37
8	8SW19	250X200-482	250	200	SK-2	225	767	648	180	485	412	350	700	615	160	95	150	125	130	28	6	22	105	170	11	18	60	65.5	350	280S	75
9	10SW18H	300X250-432.5	300	250	SK-2	234	824	625	199	505	487	379	820	680	190	100	160	130	130	30	6	22	105	170	11	18	60	65.5	380	225M	45
10	10SW19	300X250-485	300	250	SK-3	245	845	645	200	502	450	382	825	690	200	125	160	130	150	30	6	26	105	175	14	22	80	87.5	500	315S	110
11	10SW22	300X250-560	300	250	SK-3	265	870	675	202	515	455	385	825	690	200	125	160	130	150	30	6	26	105	175	14	22	80	87.5	650	315L	160
12	12SW15	300X300-388	300	300	SK-3	280	896	690	208	518	460	388	900	750	230	120	180	140	150	30	6	26	105	175	14	22	80	87.5	810	200L	30
13	12SW21	400X300-540	400	300	SK-3	315	925	716	210	520	470	390	900	750	230	120	180	140	150	34	6	26	105	175	14	22	80	87.5	870	315L	200
14	12SW24	350X300-600	350	300	SK-3	360	939	736	204	505	475	395	908	750	230	120	180	140	150	34	6	26	105	175	14	22	80	87.5	950	315L	200
15	14SW20	400X350-516	400	350	SK-3	412	945	741	204	515	650	405	960	800	230	120	180	140	150	34	6	26	105	175	14	22	80	87.5	820	315M	132
16	14SW24	400X350-627	400	350	SK-4	480	1125	765	250	535	850	650	960	800	230	120	180	140	175	36	6	28	110	185	18	25	95	104.5	1575	355M	250
17	16SW24	400X400-609	400	400	SK-4	505	1175	792	265	575	950	750	1000	890	250	130	190	150	175	36	6	28	110	185	18	25	95	104.5	1725	355M	250
18	16SW25	450X400-639	450	400	SK-4	575	1210	824	276	595	950	840	1000	890	250	130	190	150	175	36	6	28	110	185	18	25	95	104.5	1865	400HC	400
19	20SW29	600X500-748	600	500	SK-4	605	1260	850	290	613	1055	925	1050	925	285	175	210	180	175	40	6	28	110	185	18	25	95	104.5	2020	500HA	710
20	24SW26	600X600-667	600	600	SK-4	645	1290	895	292	633	1150	980	1050	925	285	175	210	180	175	40	6	28	110	185	18	25	95	104.5	2150	450HC	560

Note:
All dimension are in mm.
Dimension are for referance only and may differ from those of actual construction.

GENERAL ARRANGEMENT DRAWING FOR VERTICAL SEWAGE PUMPS WITH MOTORS

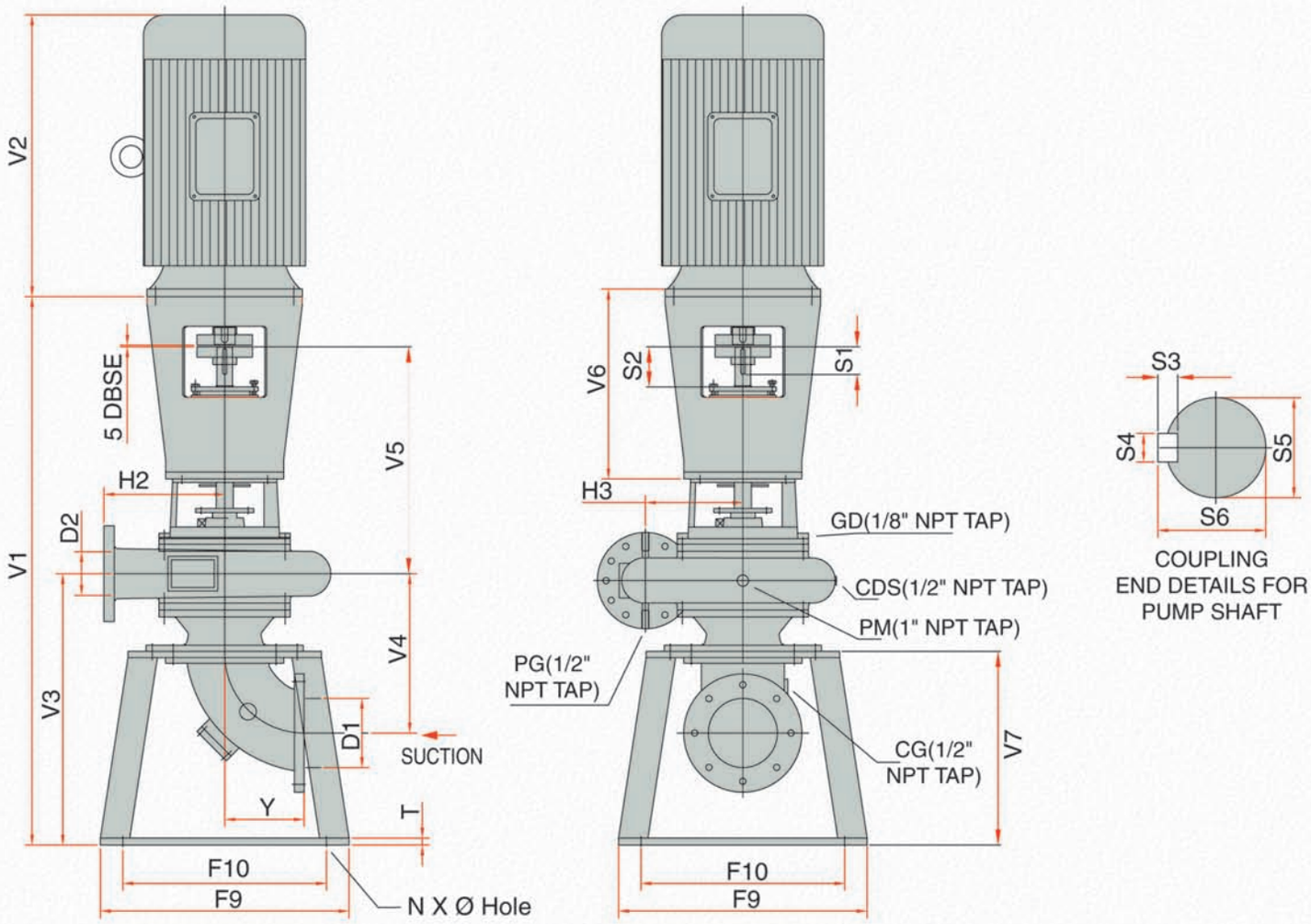

GENERAL DIMENSIONS FOR VERTICAL NON-CLOG SEWAGE PUMPS

Sl No	PUMP MODEL	PUMP SIZE	SIZE		SHAFT GROUP	OVERALL DIMENSIONS									BASE DIMENSIONS						SHAFT DETAILS						APPROX. WEIGHTS (kg)			DRIVER DETAILS	
			D_1	D_2		V1	V2	V3	V4	V5	V6	V7	H2	H3	F9	F10	Y	T	N	ØHole	S1	S2	S3	S4	S5	S6	BARE PUMP	PUMP STOOL	MOTOR STOOL	Motor Frame Size	6 Pole 50Hz Selected Motor (kw)
1	3SW13	100X80-320	100	80	SK-1	1060	386	430	275	470	515	385	200	180	460	400	160	20	4	18	80	116	9	14	45	49.5	185	60	55	132S	5.5
2	4SW12	100X100-300	100	100	SK-1	1100	298	446	284	485	528	395	210	195	476	431	210	20	4	18	80	116	9	14	45	49.5	200	65	60	90L	2.2
3	4SW16	100X100-385	100	100	SK-1	1121	550	487.5	325.5	519	528	395	225	208	475	375	208.5	20	4	18	80	116	9	14	45	49.5	220	70	60	160L	18.5
4	5SW13	125X125-330	125	125	SK-1	1075	386	420	290	515	539	364.5	250	175	475	375	210	22	4	18	80	116	9	14	45	49.5	230	75	65	132S	7.5
5	5SW14	125X125-355	125	125	SK-1	1064	506	428	249.5	521	539	364.5	250	175	635	486	235	22	4	18	80	116	9	14	45	49.5	245	75	65	160M	11
6	6SW13	200X150-340	200	150	SK-1	1060	506	765	438	676	527	542	353	282	720	590	230	22	4	18	80	116	9	14	45	49.5	270	100	75	160M	11
7	8SW18	250X200-451	250	200	SK-2	1900	677	890	545	715	690	720	390	315	833	702	250	24	4	18	105	170	11	18	60	65.5	310	120	95	200L	37
8	8SW19	250X200-482	250	200	SK-2	1925	847	1000	565	775	690	720	412	350	833	702	265	24	4	18	105	170	11	18	60	65.5	350	120	95	280S	75
9	10SW18H	300X250-432.5	300	250	SK-2	1946	714	948	514	824	690	720	487	379	833	702	280	24	4	18	105	170	11	18	60	65.5	380	120	95	225M	45
10	10SW19	300X250-485	300	250	SK-3	2020	1051	970	675	850	700	780	450	382	850	720	310	26	4	20	105	175	14	22	80	87.5	500	120	102	315S	110
11	10SW22	300X250-560	300	250	SK-3	2090	1161	1010	675	875	700	780	455	385	875	735	325	26	4	20	105	175	14	22	80	87.5	650	145	118	315L	160
12	12SW15	300X300-388	300	300	SK-3	2193	677	1045	680	890	700	780	460	388	890	770	360	26	4	20	105	175	14	22	80	87.5	810	150	122	200L	30
13	12SW21	400X300-540	400	300	SK-3	2225	1161	1060	685	910	725	720	470	390	900	800	370	28	4	20	105	175	14	22	80	87.5	870	200	131	315L	200
14	12SW24	350X300-600	350	300	SK-3	2191	1161	1077	688	939	725	720	475	395	960	816	325	28	4	20	105	175	14	22	80	87.5	950	220	145	315L	200
15	14SW20	400X350-516	400	350	SK-3	2230	1161	1212	813	945	725	800	650	405	1045	900	395	28	4	20	105	175	14	22	80	87.5	820	235	150	315M	132
16	14SW24	400X350-627	400	350	SK-4	2250	1366	935	800	1110	800	850	850	650	1090	925	500	30	4	24	110	185	18	25	95	104.5	1575	362	235	355M	250
17	16SW24	400X400-609	400	400	SK-4	2295	1366	1080	850	1180	880	980	950	750	1100	950	500	30	4	24	110	185	18	25	95	104.5	1725	398	260	355M	250
18	16SW25	450X400-639	450	400	SK-4	2350	2136	1125	925	1245	924	980	950	840	1100	950	500	30	4	24	110	185	18	25	95	104.5	1865	425	280	400HC	400
19	20SW29	600X500-748	600	500	SK-4	2385	2430	1180	990	1290	975	1050	1055	925	1190	1100	650	30	4	24	110	185	18	25	95	104.5	2020	460	303	500HA	710
20	24SW26	600X600-667	600	600	SK-4	2460	2090	1250	1100	1325	1000	1150	1150	980	1190	1100	650	30	4	24	110	185	18	25	95	104.5	2150	590	353	450HC	560

Note:
All dimension are in mm.
Dimension are for referance only and may differ from those of actual construction.

SW NON-CLOG SEWAGE PUMPS

PUMPSENSE *SW* RANGE

DATA SHEET FOR PUMPSENSE *SEWAGE* PUMPS

A. PUMP FRAME	Unit	3SW13	4SW12	4SW16	5SW13	5SW14	6SW13	8SW18	8SW19	10SW18H	10SW19	10SW22	12SW15	12SW21	12SW24	14SW20	14SW24	16SW24	16SW25	20SW29	24SW26
1. Delivery Branch Size	mm	80	100	100	125	125	150	200	200	250	250	250	300	300	300	350	350	400	400	500	600
2. Suction Branch Size	mm	100	100	100	125	125	200	250	250	300	300	300	300	400	350	400	400	400	450	600	600
3. Flange rating	PN10/ PN16 AS STANDARD ANSI 125# & OTHER FLANGES ON REQUEST.																				
4. Casing Material	CAST IRON BS EN 1561 GRADE 250 AS STANDARD. OTHER GRADES RECOMMENED DEPENDING UPON THE APPLICATION.																				
5. Casing Thickness	mm	16	16	16	16	16	16	18	18	18	18	18	18	18	18	20	20	20	20	24	24
6. No. of Stages		1	1	1	1	1	1	1	1	1	1	1	1	1	1	1	1	1	1	1	1
7. Pump Casing Gasket	mm	0.4	0.4	0.4	0.4	0.4	0.4	0.4	0.4	0.4	0.4	0.4	0.4	0.4	0.4	0.4	0.4	0.4	0.4	0.4	0.4
Shaft Group		1	1	1	1	1	1	2	2	2	3	3	3	3	3	3	4	4	4	4	4

B. IMPELLER AND ROTOR

1. Maxm Impeller Diameter	mm	320	300	385	330	355	340	451	482	432.5	485	560	388	540	600	516	627	609	639	748	667
2. Weight of Impeller	Kg	13	15	23	21	22	20	42	49	46	56	71	50	90	136	65	110	105	111	269	150
3. Impeller Eye Diameter	mm	150	142	140	164	160	168	228	242	225	281	281	296	337	254	262	305	339	415	429	459
4. Impeller Eye Area	Sq cm	177	158	154	211	201	222	408	460	397	620	620	688	892	506	539	730	902	1352	1445	1654
5. GD ^2 for Maximum Diameter	$Kg.m^2$	1.1	0.9	2	0.95	1.4	1.8	6.1	6.5	1.9	2.1	4	2.9	4.6	6.7	4.1	6.5	7.4	7.8	23.1	10

C. SHAFT AND BEARINGS

1. Shaft diameter at Impeller	mm	35	35	35	35	35	35	50	50	50	70	70	70	70	70	70	85	85	85	85	85
2. Shaft diameter at Coupling	mm	45	45	45	45	45	45	60	60	60	80	80	80	80	80	80	95	95	95	95	95
3. Bearing Centres	mm	154	154	154	154	154	154	215	215	215	232	232	232	232	232	232	285	285	285	285	285
4. Basic Design-Bearing No at outer end		3311	3311	3311	3311	3311	3311	3314	3314	3314	3318	3318	3318	3318	3318	3318	3321	3321	3321	3321	3321
5. Basic Design-Bearing No at inner end		21311	21311	21311	21311	21311	21311	21314	21314	21314	21318	21318	21318	21318	21318	21318	21321	21321	21321	21321	21321

D. STUFFING BOX

1. Inside Diameter	mm	40	40	40	40	40	40	55	55	55	75	75	75	75	75	75	90	90	90	90	90
2. Type of Seal	GLAND PACKING (DOUBLE MECHANICAL SEAL- FLOWSERVE OR EQUIVALENT AS AN OPTION)																				
3. Gland Packing Size	mm	10X10	10X10	10X10	10X10	10X10	10X10	10X10	10X10	10X10	12x12	12x12	12x12	12x12	12x12	12x12	16x16	16x16	16x16	16x16	16x16

E. SERVICE LIMITS

1. Maxm. Working Pressure	Bar	12	12	12	12	12	12	12	12	12	12	12	12	12	12	16	16	16	16	16	16
2. Maxm. Hydrotest Pressure	Bar	18	18	18	18	18	18	18	18	18	18	18	18	18	18	24	24	24	24	24	24
3. Maxm. Suction Pressure	Bar	5	5	5	5	5	5	5	5	5	5	5	5	5	5	5	5	5	5	5	5
4. Max. Temp. Mechanical Seal	ºC	95	95	95	95	95	95	95	95	95	95	95	95	95	95	95	95	95	95	95	95
5. Maxm. Speed	RPM	1500	1500	1500	1500	1500	1500	1500	1500	1500	1500	1500	1500	1500	1500	1500	1500	1500	1000	1000	1000
6. Max. Solid Size	mm	70	70	70	70	70	70	100	100	100	125	125	125	125	125	125	140	140	140	140	140

OTHER PRODUCTS FROM PUMPSENSE

CSC, New Generation Compact Split Case Pumps, offer high energy efficiency, optimum mechanical reliability and smallest foot print for air conditioning and industrial casting applications. These pumps are also offered in vertical and high pressure configurations

Our single stage range of NFPA20 fire pumps cover duties up to 5000usgpm and beyond. Pumps can be supplied with certification by independent inspection agencies

Standard split case range covers both single and two stage pumps for capacities upto 300m3/hr and heads up to 200m. Many customized options are available

Complete range of ISO 2858 End Suction pumps are optimized for highest possible efficiency. All pumps are available in high working pressure versions with strengthened bearing arrangement

Large end suction pumps cover sizes up to 400mm. These pumps are available for air con, industrial cooling water supply, and marine fire services

Two stage split case pumps are available for high pressure cleaning and high head industrial applications. Pumps are offered with both internal and external cross-over for capacities up to 100m3/hr and head up to 400m

Single stage double volute split case pumps are offered both in horizontal and vertical shaft configuration. Customised designs are offered for special applications

Two stage NFPA20 Split Case fire pumps incorporate two double entry impellers for high suction capability and complete axial thrust balance. The pumps are available for rated flows up to 1500gpm and heads up to 300mat 2950rpm

Test Bed at Pumpsense is fully compliant with requirements of ISO9906. Test set up is fully automated for data aquisation

We upgrade our product continuously. The information contained in this brochure should be used for general guidelines only since they are subject to change without notice.

PUMPSENSE FLUID ENGINEERING PVT. LTD

5/F, Hastings Court, Tower A , 96, Garden Reach Road, Kolkata – 700023, INDIA

Tel: +91-33- 24591861/1862 Fax: +91-33-24591862

Web: worldofpumps.com email: enquiries@worldofpumps.com